ALTERNATIVE INVESTMENT PRODUCTS

TRANSACTION FLOW

COMMISSION

NON-SETTLING

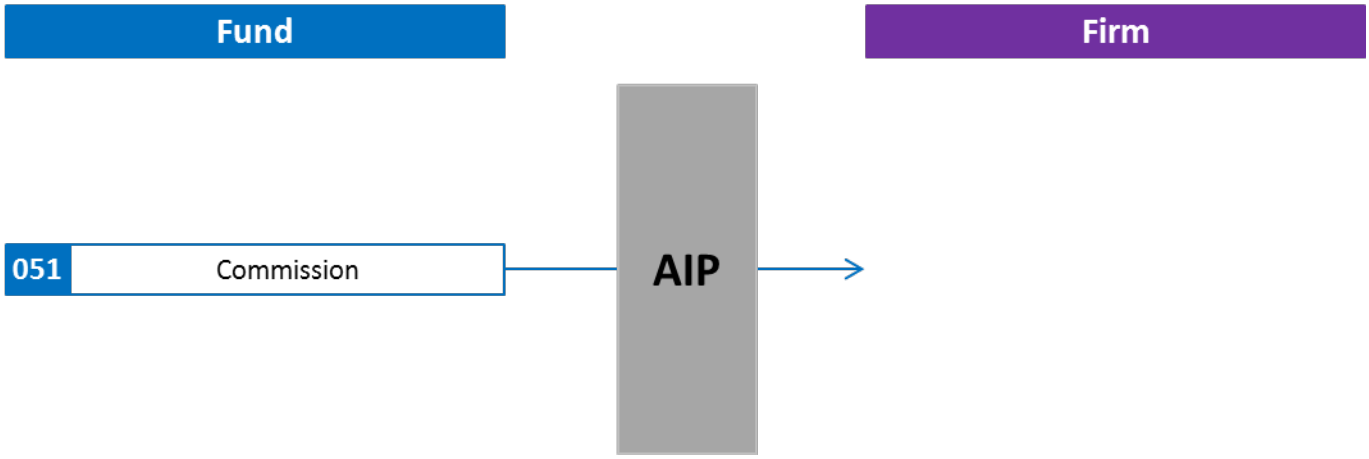

COMMISSION – NON-SETTLING

The commission record allows Funds to report, at an account level, their detailed commission data.

Transaction Flow Details for Commission Transactions

- The Fund must transmit the Commissions record (051) to AIP for validation
- Once received, AIP will validate for syntax errors (format, values, conditions, etc)
- If there is an error, AIP will reject the file back to the Fund with the appropriate reject reason code(s)
- If there are no syntax errors, AIP will transmit the Commission file to the Firm for processing

Note: An Acknowledgement or Confirmation record is not required

Important Information for Commission Settlement

- If the 'Settlement Indicator' is marked as '2 = Non-Settling', the commission will not settle

COMMISSION

SETTLING

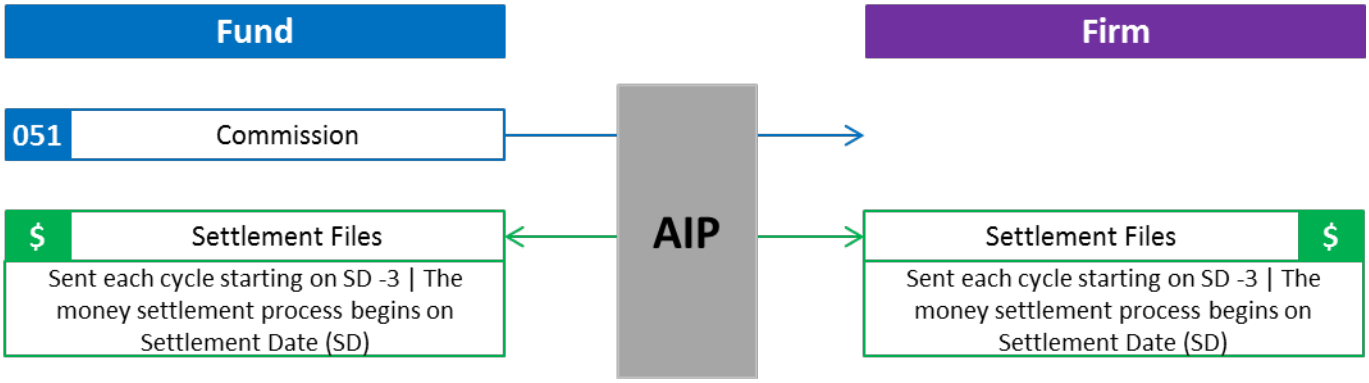

COMMISSION – SETTLING

The commission record allows Funds to report, at an account level, their detailed commission data.

Transaction Flow Details for Commission Transactions

- The Fund must transmit the Commissions record (051) to AIP for validation
- Once received, AIP will validate for syntax errors (format, values, conditions, etc)
- If there is an error, AIP will reject the file back to the Fund with the appropriate reject reason code(s)
- If there are no syntax errors, AIP will transmit the Commission file to the Firm for processing

Note: An Acknowledgement or Confirmation record is not required

Important Information for Commission Settlement

- If the 'Settlement Indicator' is marked as '1 = Settling', the commission will settle on the Settlement Date indicated
- If the 'Debit/Credit indicator' is marked as '1=Debit Firm/Credit Fund', the transaction will debit the Firms settling bank account on settlement date without an Acknowledgement or Confirmation